Direct Current enhanced Disconnector

Passive injection

CONTEXT

Due to the development of High Voltage Direct Current (HVDC) technology which is particularly suitable for the transmission of large amount of energy over long distances and for off-shore energy integration, new technology for HVDC Switchgears must be developed. In a meshed network, using a breaker to reconfigure the network can be expensive. To save capex and space, disconnectors can be used to this propose, therefore they need to be able to switch loads within loops.

In contrast to an AC circuit switches that interrupts a current at its natural current zero, in DC an artificial current zero must be created with the assistance of an auxiliary circuit.

In AC Ultra high voltage networks, nominal currents and loop voltages are increasing and reaching the limits of conventional disconnector contact systems.

APPLICATION DOMAIN

- MVDC and HVDC network
- Ultra HVAC (high busbar transfer requirements)

ADVANTAGES

- Low conduction losses in main branch
- Allows to create redundancy in HVDC substations (Double busbars scheme)
- Low cost (compared to DCCB)

TECHNOLOGY DESCRIPTION

The proposed technology allows to :

- Commute the main current to a secondary contact system
- Create current zeros within this secondary contact loop by a current oscillation
- Absorb the magnetic energy through a low voltage surge-arrestor.
- Interrupt loop currents

This principle can be applied to DC and AC disconnectors.

TRL SCALE

1 2 3 4 5 6 7 8 9

Patent

DELIVERABLES
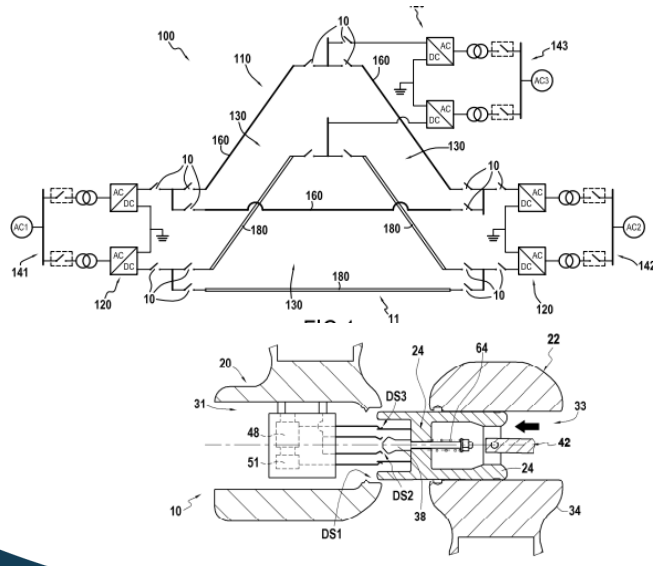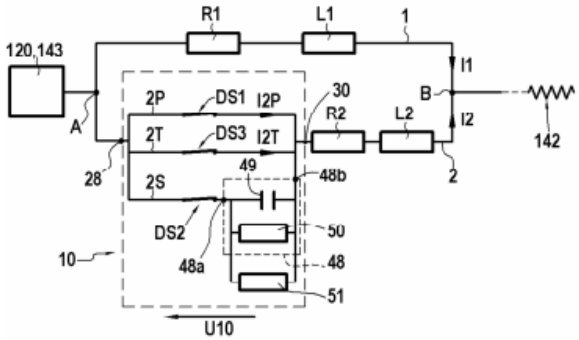
PATENT APPLICATION WO2019077269